Pengenalan AVR

Bayu Anggorojati, Grafika Jati, M. Anwar Ma’sum

Pembahasan Bab Ini

- Arsitektur AVR
- Register
- Perintah di AVR
- Contoh program AVR

AVR

- Dikembangkan oleh **A**lf-Egil Bogen and **V**egard Wollan
- Merupakan **R**ISC processor
- **A**dvanced **V**irtual **R**isc processor

AVR

- Single cycle execution
  - One instruction per external clock
  - Low power consumption
- 32 Working Registers
  - All Directly connected to ALU!

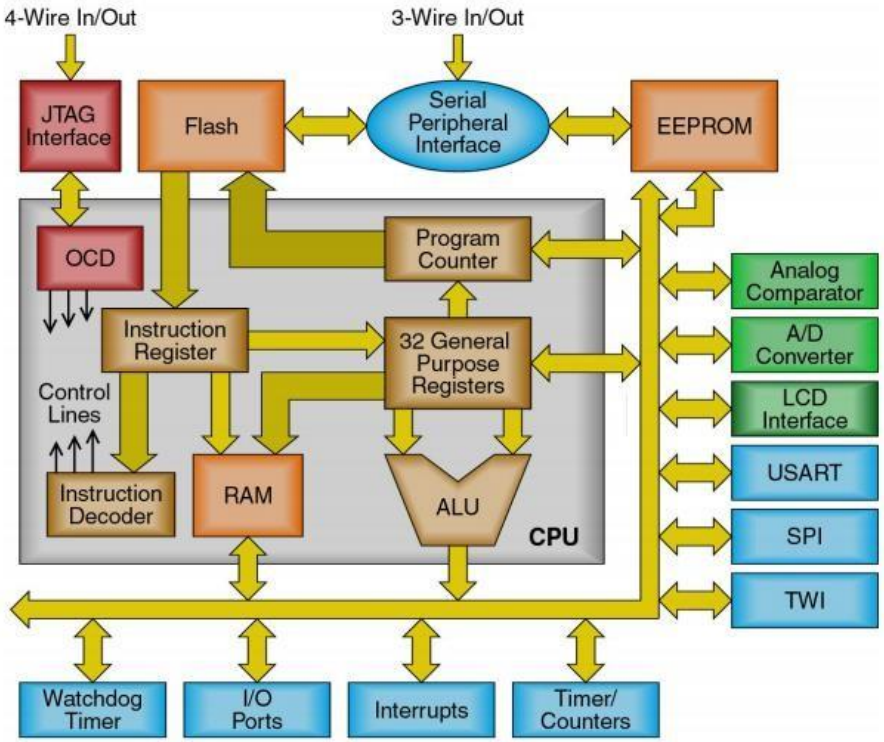

Arsitektur AVR

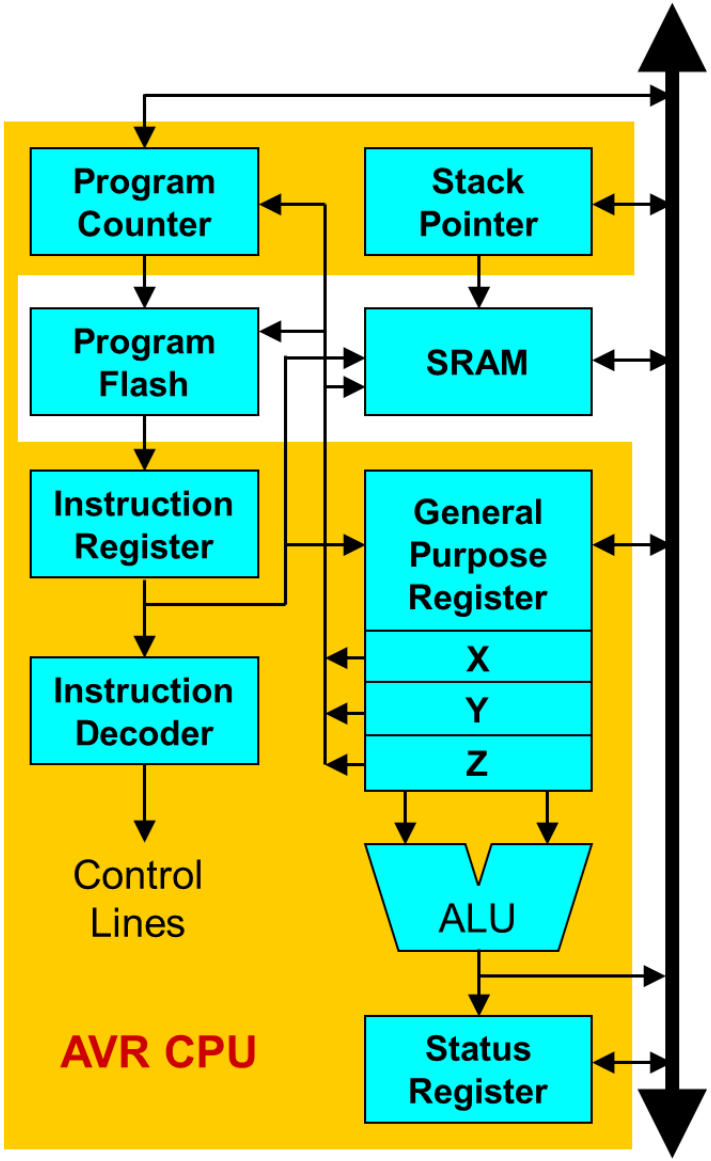

Arsitektur AVR

Program memory

Data memory

Register

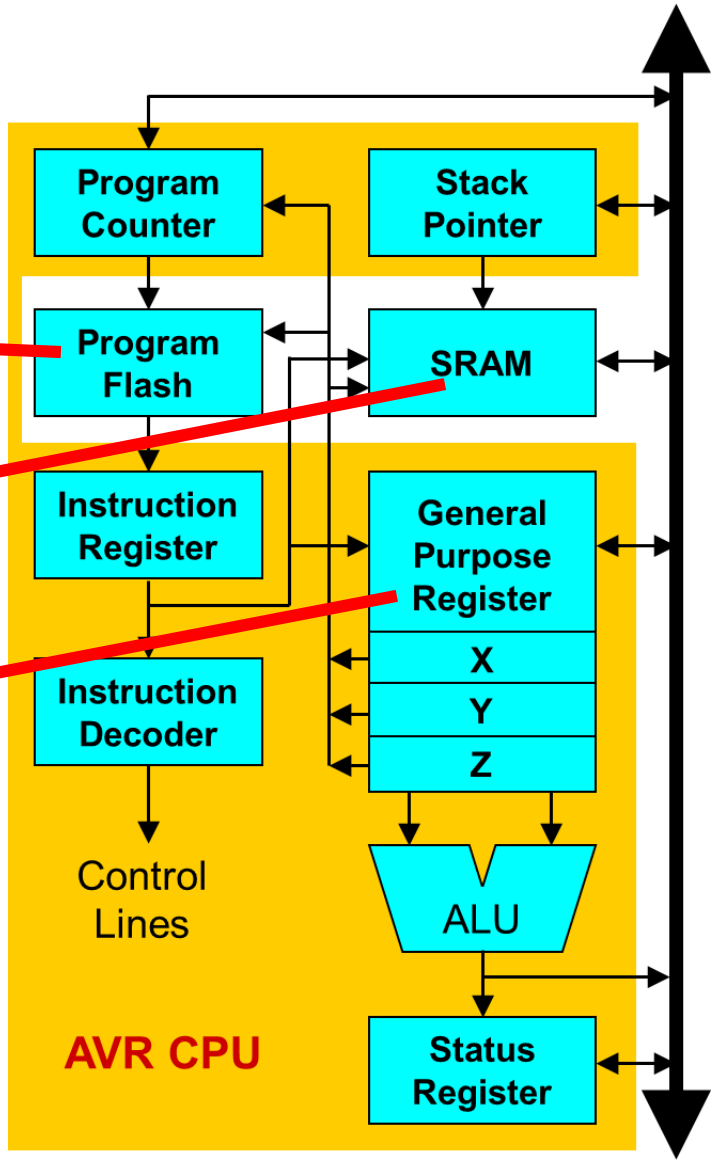

Arsitektur AVR

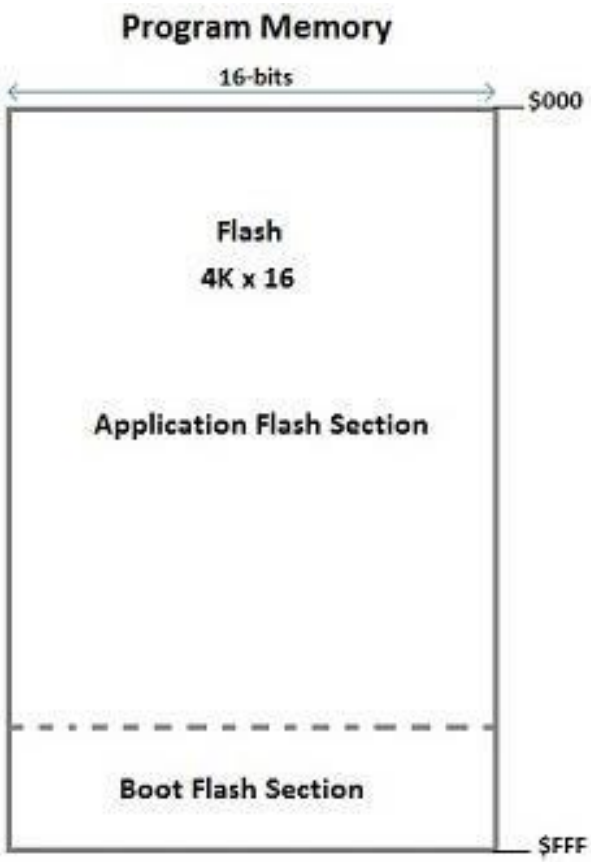

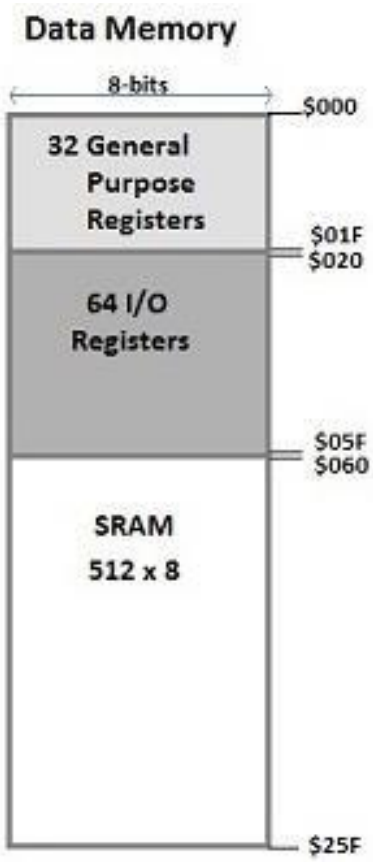

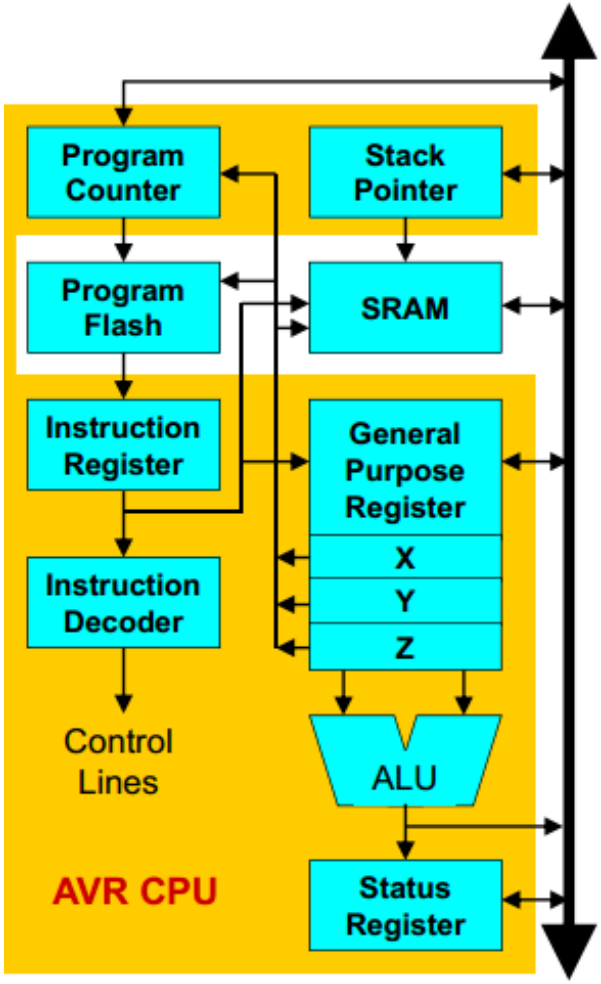

AVR Register

Bit 7	Bit 6	Bit 5	Bit 4	Bit 3	Bit 2	Bit 1	Bit 0

- Menggunakan 8 bit register
- Dapat menyimpan:
  - Angka dari 0 sampai 255 (unsigned),
  - Angka dari -128 to +127 (signed),
  - ASCII-coded character
  - Digit 8 bit apapun

AVR Register

- Register di AVR terdapat beberapa jenis:
  - 1 Program Counter (16 bit)
  - 1 Status Register (8 bit)
  - Stack Pointer (16 bit)
  - 32 General Purpose Register (8 bit)

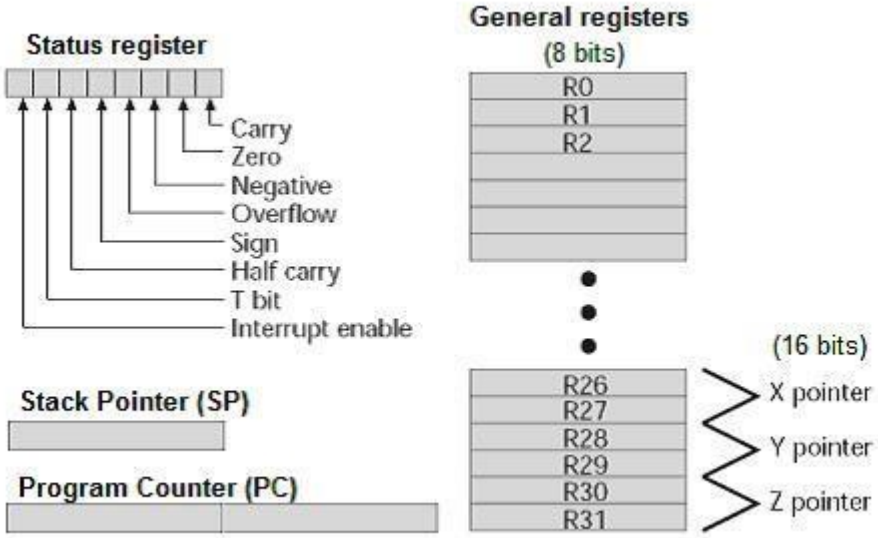

AVR Register: Status Register

- Berisi 8 flag (indikator) yang berbeda.
- Flag akan diperbarui berdasarkan hasil dari setiap operasi di CPU
- Contoh:
  - Jika operasi di CPU menghasilkan nilai 0, maka flag ‘zero’ akan ditetapkan dengan nilai 1

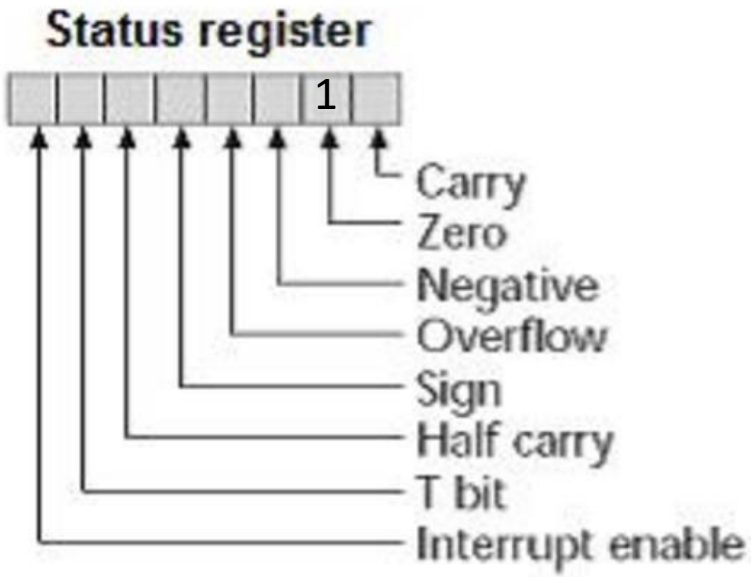

AVR Register: General Purpose

Bit 7	Bit 6	Bit 5	Bit 4	Bit 3	Bit 2	Bit 1	Bit 0

- Karakteristik register:
  - Bisa digunakan langsung pada perintah assembler
  - Operasi pada nilai register hanya membutuhkan sebuah instruksi
  - Register terhubung langsung ke CPU
  - Register merupakan sumber dan tujuan dari nilai hasil perhitungan
  - 6 Register terakhir (R26-R31) dapat dikombinasikan sebagai tiga register yang memiliki panjang 16-bit (Register X, Y, dan Z)

AVR Register

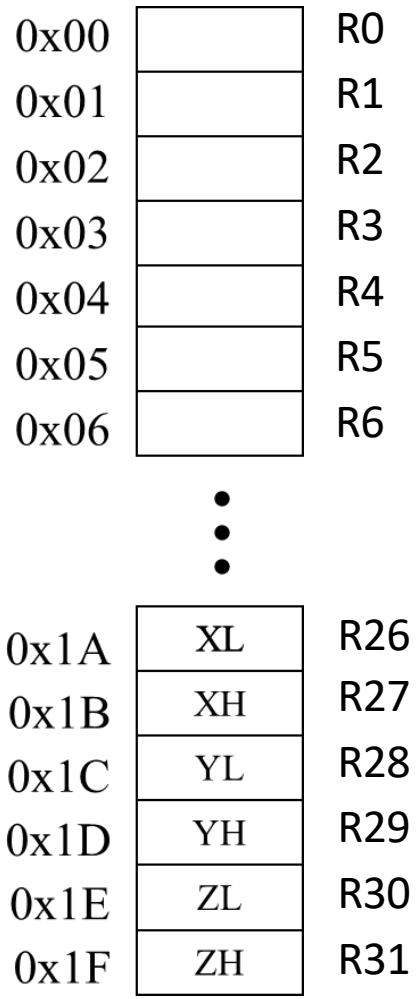

AVR memiliki 32 register

R0, R1, R2, … R31

AVR Register

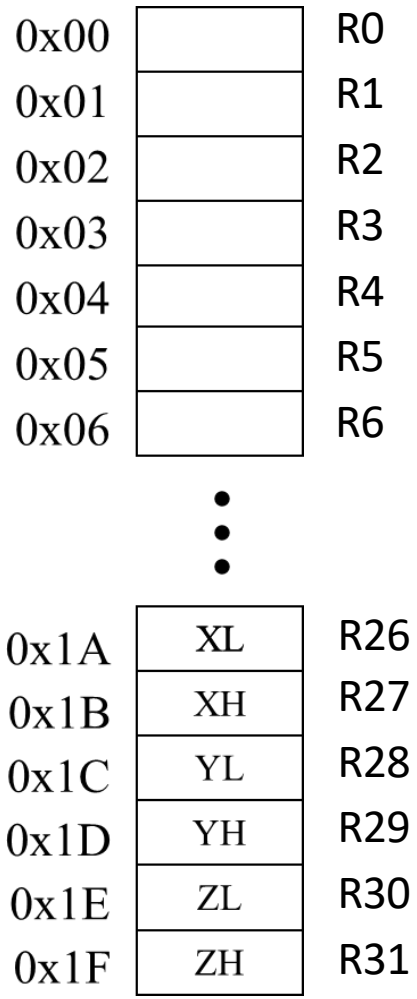

AVR memiliki 32 register

R0, R1, R2, … R31

Contoh 1:

```
LDI R16,150
```

AVR Register

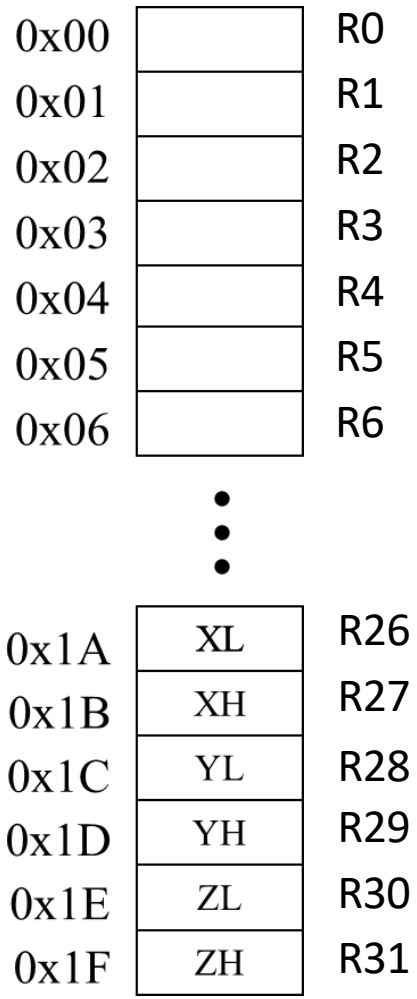

AVR memiliki 32 register

R0, R1, R2, … R31

Contoh 1:

```
LDI R16,150
```

Contoh 2:

```
LDI R16,150
MOV R15, R16
```

AVR Register

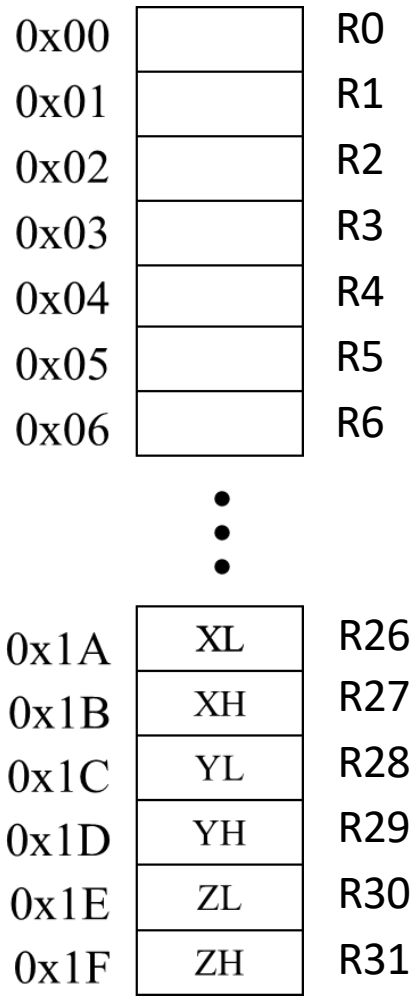

Contoh 3:

```
LDI R15,150
```

AVR Register

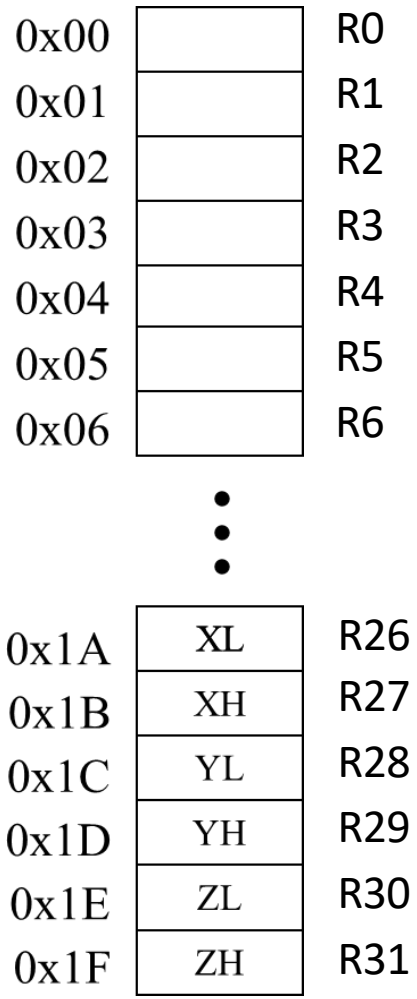

Contoh 3:

```
LDI R15,150
```

→ **ERROR**

AVR Register

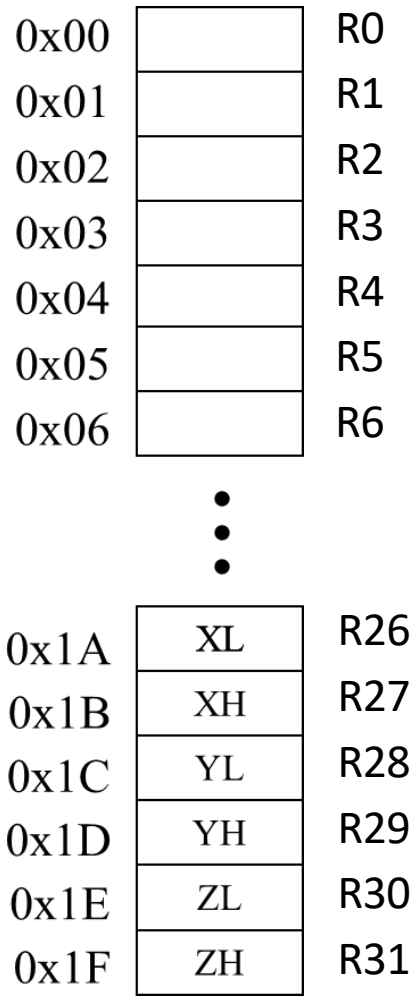

Contoh 3:

```
LDI R15,150
```

→ **ERROR**

Hanya R16-R31 yang dapat dioperasikan dengan instruksi yang mengandung konstanta (immediate), seperti:

- LDI Rx,K
- ANDI Rx, K
- CPI Rx, K
- SBCI Rx, K
- SUBI Rx, K

Penggunaan Register

- Register dapat dinamai ulang dengan menggunakan *syntax* **.DEF**
  - **Contoh:** .def reg1=r17
- Untuk membaca/menulis ke Data Memory, gunakan register **R26 sampai R31** [Akan dijelaskan pada materi **Memory & Addressing**]
- Untuk membaca/menulis ke program memory (program flash), gunakan register **Z (R31:R30)** dan **R0**
- 16-bit counter sebaiknya diletakkan di **R25:R24** [Akan dijelaskan pada materi **Interrupt**]

Perintah AVR

- Dapat memiliki 2 operands, 1 operand, atau tidak terdapat operand sama sekali
- Contoh:
  - Penjumlahan: ADD R1, R2 (2 Operands)
  - Negasi 2’s: NEG R5 (1 Operand)
  - Load Program Memory: LPM (0 Operand)

Perintah AVR

Mnemonic	Description	Mnemonic	Description	Mnemonic	Description
Flow Control		**Bit Manipulation**		**Load/Store**	
JMP ◆	Jump absolute (24-bit)	SEC/CLC	Set/clear C flag (carry)	MOV	Copy register to register
RJMP	Branch relative (12-bit)	SEH/CLH	Set/clear H flag (half carry)	LD	Load indirect through X/Y/Z
IJMP ●	Jump indirect (Z)	SEN/CLN	Set/clear N flag (negative)	LD ●	Load indirect with postincremnt
RCALL	Call subroutine	SEZ/CLZ	Set/clear Z flag (zero)	LD ●	Load indirect with predecremnt
ICALL ●	Call subroutine indirect (Z)	SEI/CLI	Set/clear I flag (interrupt)	LDD ●	Load indirect with 6-bit offset
RET/RETI	Return/from interrupt	SES/CLS	Set/clear S flag (sign)	LDI	Load 8-bit immediate
CP/CPC	Compare/with carry	SEV/CLV	Set/clear V flag (overflow)	LDS ●	Load from 16-bit address
CPI	Compare with 8-bit immediate	SET/CLT	Set/clear T bit	LPS ●	Load from program space
CPSE	Compare, skip if equal	SBR/CBR	Set/clear bit in register	ST	Store indirect through X/Y/Z
SBRS/SBRC	Skip if register bit set/clear	BSET/BCLR	Set/clear bit in status register	ST ●	Store indirect with postincremnt
SBIS/SBIC	Skip if I/O bit set/clear	SER/CLR	Set/clear entire register	ST ●	Store indirect with predecremnt
BRcc	Conditional branch	SBI/CBI	Set/clear bit in I/O space	STD ●	Store indirect with 6-bit offset
Logical		**Arithmetic**		STS ●	Store to 16-bit address
AND	Logical AND	ADD/ADC	Add/with carry	IN/OUT	Input/output to/from I/O space
ANDI	Logical AND 8-bit immediate	ADIW ●	Add 6-bit immediate	PUSH/POP	Push/pop stack element
OR	Logical OR	SUB/SUBC	Subtract/with borrow	BLD/BST	Load/store T bit
ORI	Logical OR 8-bit immediate	SBIW ●	Subtract 6-bit immediate	**Miscellaneous**	
EOR	Logical exclusive-OR	SUBI/SBCI	Subtract 8-bit imm/w borrow	NOP	No operation
LSL/LSR	Logical shift left/right by 1 bit	INC/DEC	Increment/decrement register	SLEEP	Wait for interrupt
ROL/ROR	Rotate left/right by 1 bit	MUL ◆	Multiply 8 × 8 → 16	WDR	Watchdog reset
ASR	Arithmetic shift right by 1 bit				
COM/NEG	One's/two's complement				
SWAP	Swap nibbles		Can use R16–R31 only	●	Not available on 90S1200, 1220
TST	Test for zero or minus		Can use R24–R31 only	◆	Future enhancement

Perintah AVR

- Detail dapat dilihat di dokumen **AVR Instruction**

ADD – Add without Carry

Description:

Adds two registers without the C Flag and places the result in the destination register Rd.

Operation:

(i) Rd ← Rd + Rr

Syntax:

(i) ADD Rd,Rr

Operands:

$0 \le d \le 31$, $0 \le r \le 31$

Program Counter:

PC ← PC + 1

16-bit Opcode:

0000	11rd	dddd	rrrr

Status Register (SREG) and Boolean Formula:

I	T	H	S	V	N	Z	C
–	–	⇔	⇔	⇔	⇔	⇔	⇔

H: $Rd3 \bullet Rr3 + Rr3 \bullet \overline{R3} + \overline{R3} \bullet Rd3$
Set if there was a carry from bit 3; cleared otherwise

S: $N \oplus V$, For signed tests.

V: $Rd7 \bullet Rr7 \bullet \overline{R7} + \overline{Rd7} \bullet \overline{Rr7} \bullet R7$
Set if two's complement overflow resulted from the operation; cleared otherwise.

N: R7
Set if MSB of the result is set; cleared otherwise.

Z: $\overline{R7} \bullet \overline{R6} \bullet \overline{R5} \bullet \overline{R4} \bullet \overline{R3} \bullet \overline{R2} \bullet \overline{R1} \bullet \overline{R0}$
Set if the result is $00; cleared otherwise.

C: $Rd7 \bullet Rr7 + Rr7 \bullet \overline{R7} + \overline{R7} \bullet Rd7$
Set if there was carry from the MSB of the result; cleared otherwise.

Operasi yang dilakukan oleh perintah ADD

Pengaruh ke Program Counter

Register yang dapat digunakan dalam operasi

Syntax Perintah

Pengaruh ke **Status Register**

Contoh Program

```
.include “m8515def.inc"

forever:
    ldi     R26, 04
    ldi     R27, $01
    ld      R16, X
    andi    R16, $63
    st      X, R16

    rjmp    forever
```

AVR Assembler

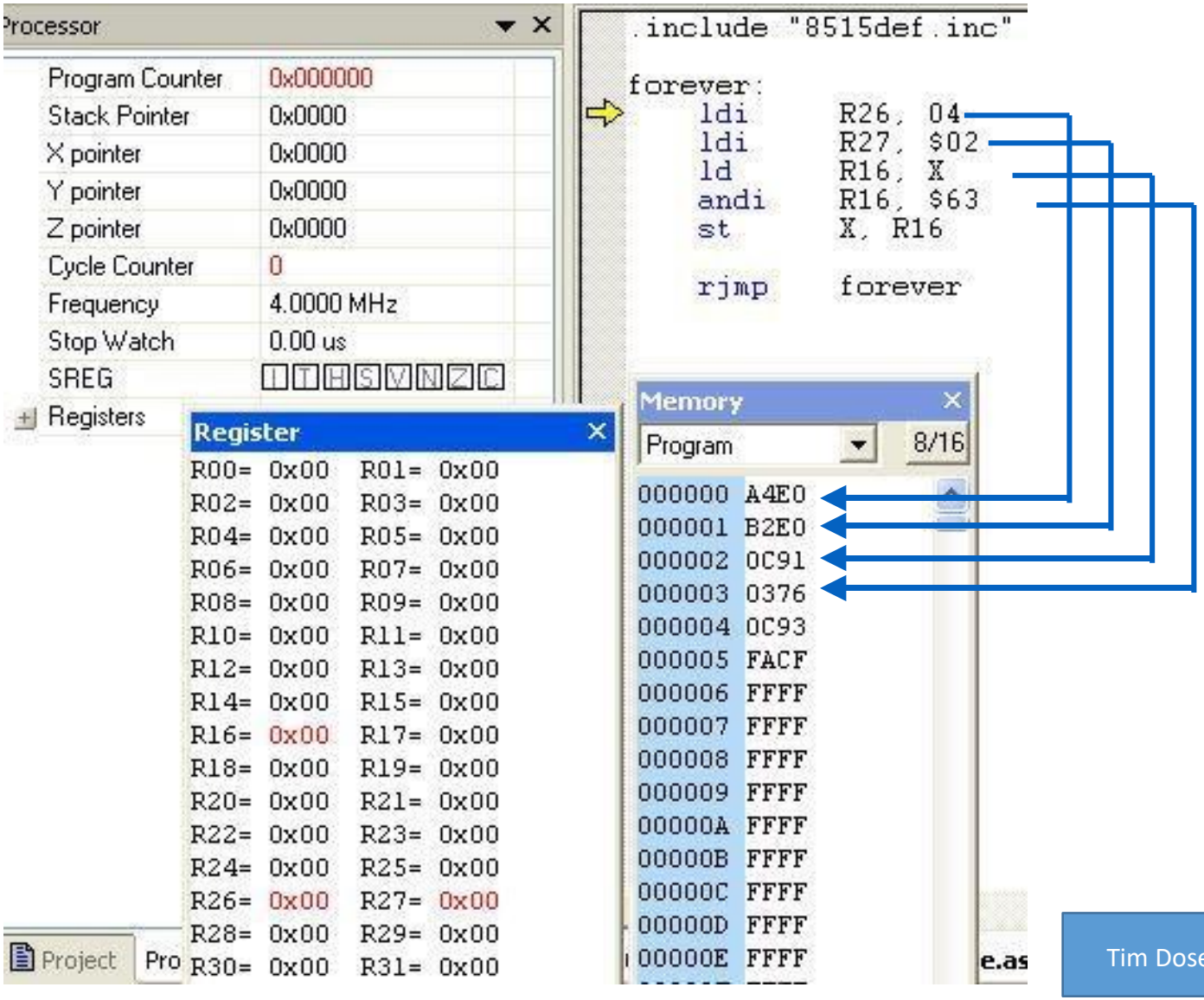

Contoh Program

```
.include “m8515def.inc"

forever:
    ldi     R26, 04
    ldi     R27, $02
    ld      R16, X
    andi    R16, $63
    st      X, R16
    rjmp    forever
```

	Address
E0A4 = 1110 0000 1010 0100	0x00
E0B2 = 1110 0000 1011 0010	0x01
910C = 1001 0001 0000 1100	0x02
7603 = 0111 0110 0000 0011	0x03
930C = 1001 0011 0000 1100	0x04
CFFA = 1100 1111 1111 1010	0x05

AVR Operation Code (Opcode)

- Setiap instruksi pada AVR dapat memiliki format Opcode yang berbeda

Contoh: AVR Opcode

ADD – Add without Carry

Description:

Adds two registers without the C Flag and places the result in the destination register Rd.

Operation:

(i) Rd ← Rd + Rr

	Syntax:	Operands:	Program Counter:
(i)	ADD Rd,Rr	$0 \le d \le 31$, $0 \le r \le 31$	PC ← PC + 1

16-bit Opcode:

0000	11rd	dddd	rrrr

Format opcode operasi ADD

Status Register (SREG) and Boolean Formula:

I	T	H	S	V	N	Z	C
–	–	⇔	⇔	⇔	⇔	⇔	⇔

H: $Rd3 \bullet Rr3 + Rr3 \bullet \overline{R3} + \overline{R3} \bullet Rd3$
Set if there was a carry from bit 3; cleared otherwise

S: $N \oplus V$, For signed tests.

V: $Rd7 \bullet Rr7 \bullet \overline{R7} + \overline{Rd7} \bullet \overline{Rr7} \bullet R7$
Set if two's complement overflow resulted from the operation; cleared otherwise.

N: R7
Set if MSB of the result is set; cleared otherwise.

Z: $\overline{R7} \bullet \overline{R6} \bullet \overline{R5} \bullet \overline{R4} \bullet \overline{R3} \bullet \overline{R2} \bullet \overline{R1} \bullet \overline{R0}$
Set if the result is $00; cleared otherwise.

C: $Rd7 \bullet Rr7 + Rr7 \bullet \overline{R7} + \overline{R7} \bullet Rd7$
Set if there was carry from the MSB of the result; cleared otherwise.

- Contoh:

ADD R1, R5

Opcode:

0000	0000	0001	0101